Nero

ASTRA SHOWER MIXER

SPECIFICATION

PRODUCT CODE	YSW2813-09
WELS RATING	N/A
WATERMARK LICENSE	WM-060073
TEMPERATURE RATING	MIN 1℃-MAX 75℃
PRESSURE RATING	MIN 150KPa-MAX 500KPa

FINISH

NR281309CH	chrome
NR281309MB	matt black

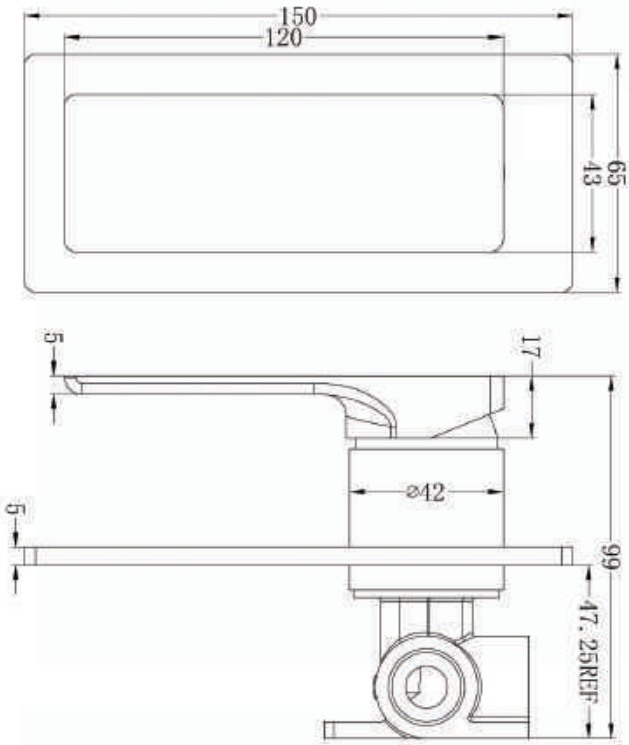

MAINTENANCE AND CARE

All surfaces should be cleaned with mild liquid detergent or soap and water.

Do not use cream cleaners or citrus based cleaning products, as they are abrasive.

Use of unsuitable cleaning agents may damage the surface.Any damage caused in this way will not be covered by warranty

PACKAGING INCLUDES

- 1x mixer body
- 1x plate
- 1x handle
- 1x installation kit

Dimensions are nominal measurements only.

15 YEARS WARRANTY 15

AS/NZS 3718
WM-060073

Versions: 2019.12

www.nerotapware.com.au

Nero

INSTALL INSTRUCTION

IMPORTANT: Please read all of the instructions before installation.

General:

1. Nero recommends this product is installed by a licensed plumber in compliance with all relevant regional regulations.
2. Do not hydrostatic test the installation with this mixer installed. Damage to the ceramic cartridge may occur.
3. All pipe work must be thoroughly flushed prior to the installation of the mixer.
4. Do not remove the ceramic cartridge from the mixer when installing.
5. After installation all connections must be checked for leaks.
6. All outlets used primarily for personal hygiene shall deliver water at a safe temperature as per regional regulations.
7. This mixer is not recommended for use in uncontrolled heating systems such as wet-backs or solar heating units unless a suitable tempering valve is fitted.
8. It is the responsibility of the installer to ensure a waterproof seal is achieved between the product and mounting surface. If in doubt about the quality of the seal, remove the product and reinstall.

Steps:

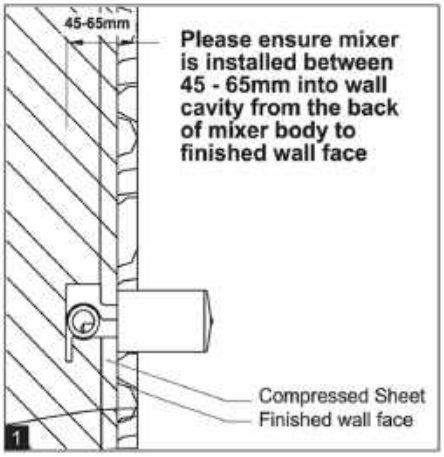

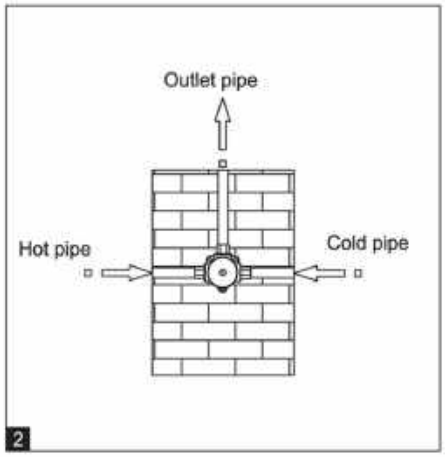

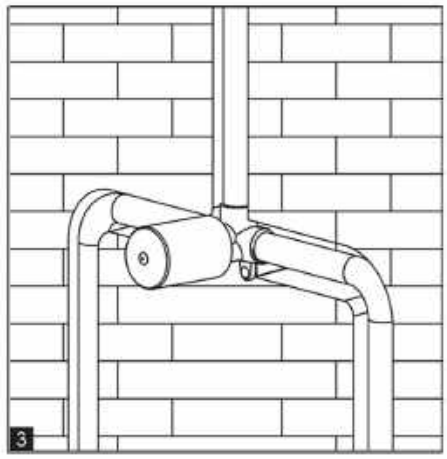

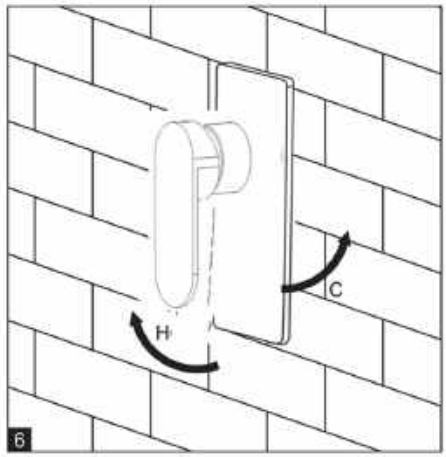

1. Install mixer body into wall cavity. Refer to diagram 1 above for setting depth of mixer body in relation to finished wall face.
2. Connect all pipe work as per diagram 2 above.
3. Pressure test for leaks then proceed to waterproof installation.
4. Remove protective sleeve and install decorator plate.
5. Install handle.
6. Operate mixer.